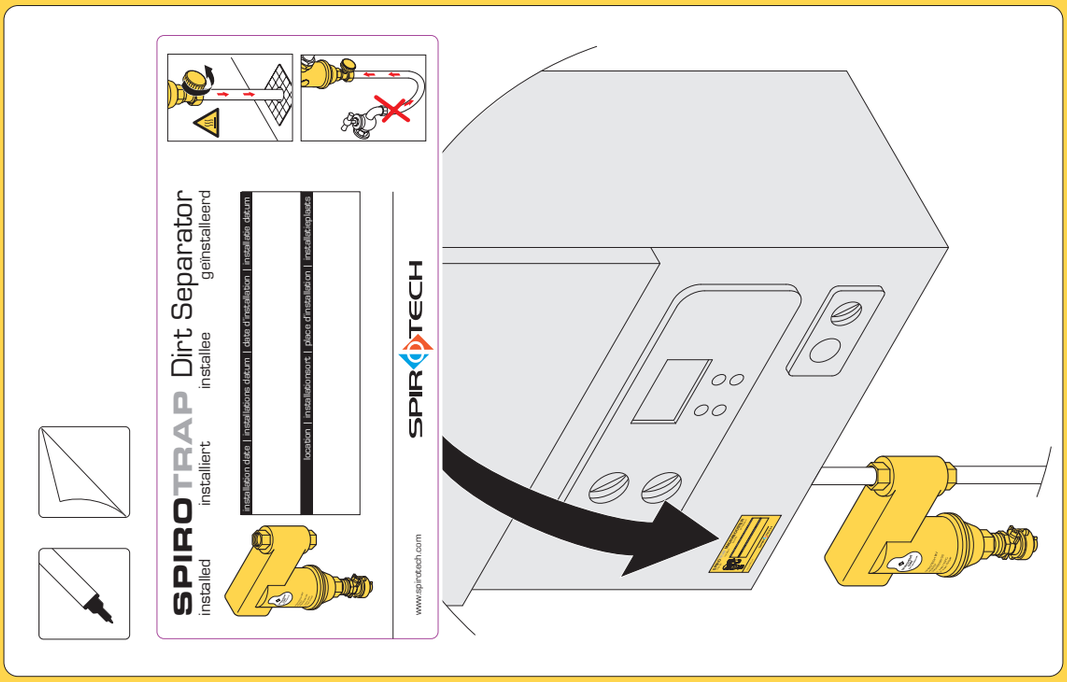

18.043-05

SPIROTRAP Dirt Separator

SPIROTECH

Mounting and operating instruction
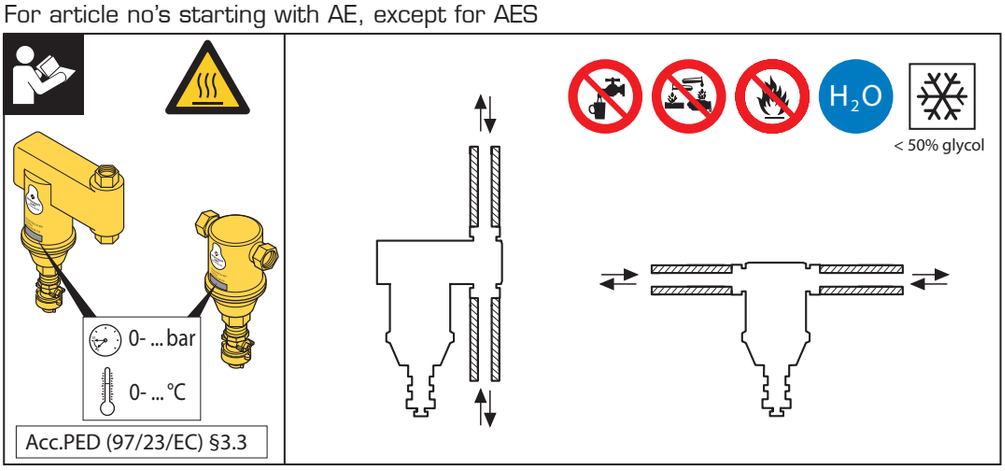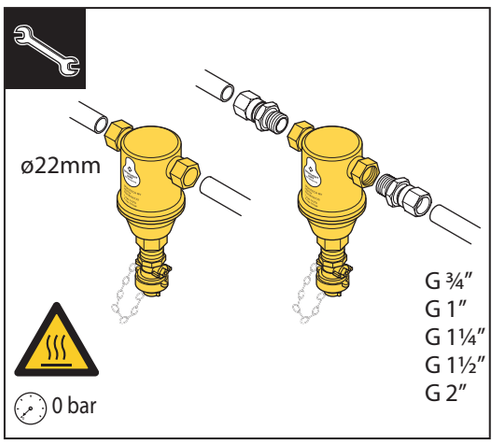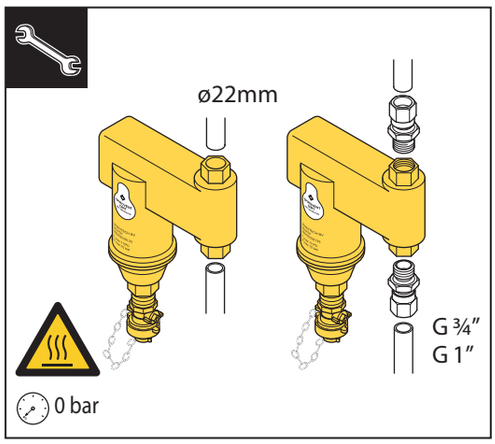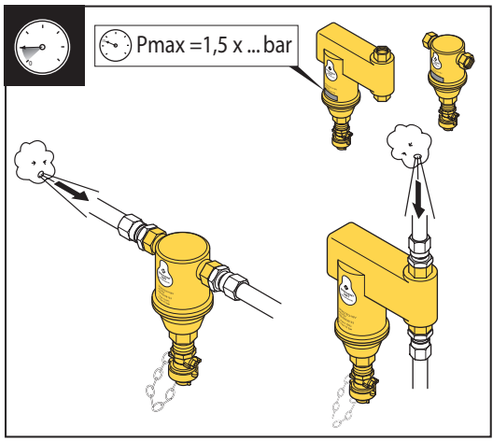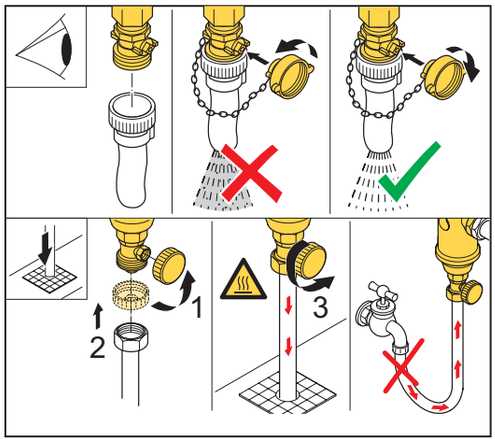
For article no's starting with AE, except for AES